# TECHNICAL DATA

Three Phase Electric Motors - Cast Iron Frame
HE30 160 M1 6 IE2
7.5 kW / 10 Cv
970 RPM

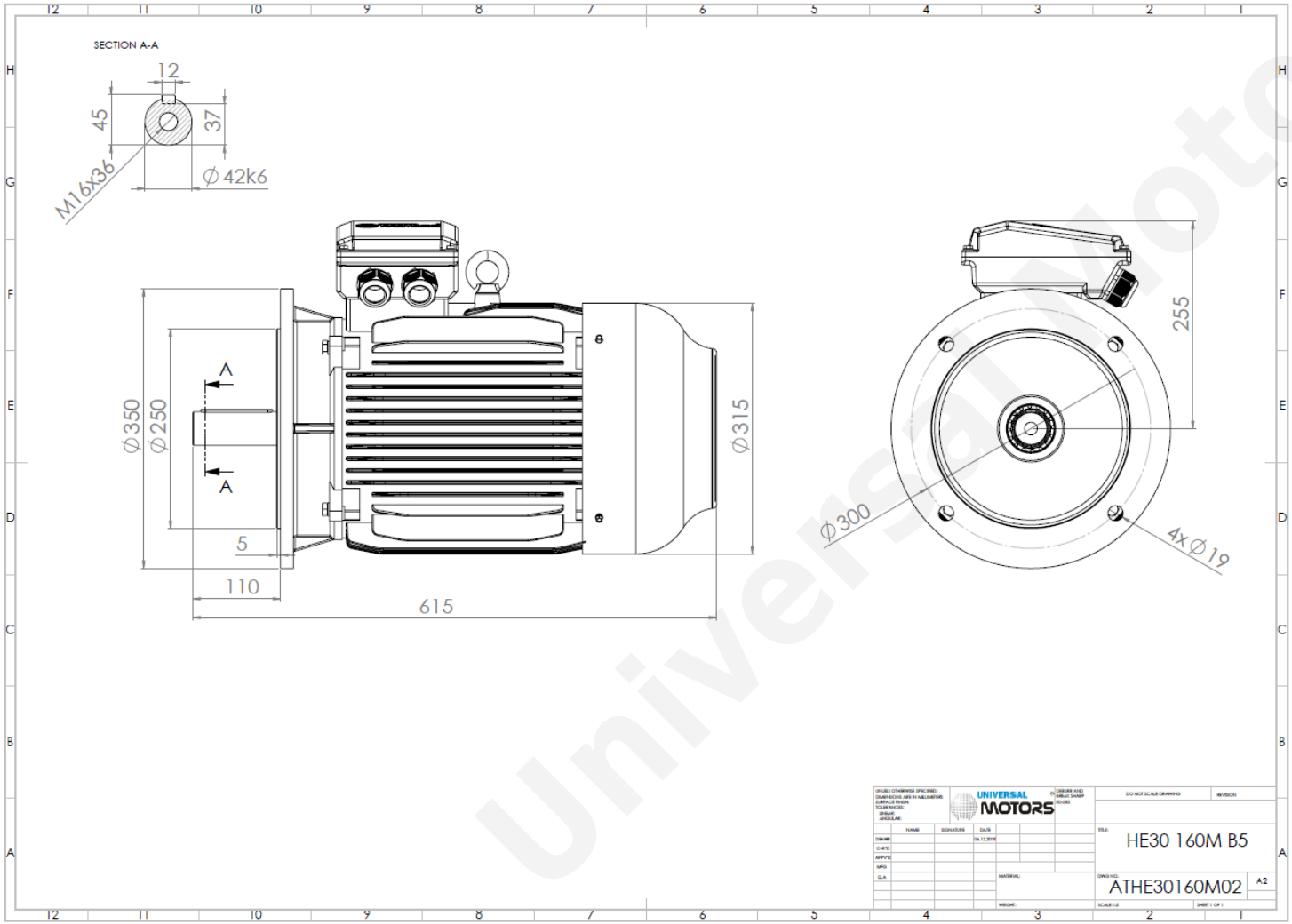


| | |
|---|---|
| Motor type: | **HE30 160 M1 6 IE2** |
| Output: | **7.5 kW / 10 Cv** |
| Speed ($min^{-1}$): | **970 RPM** |
| Frequency: | **50 Hz** |
| Voltage: | **400 V** |
| Current: | **15.9 A** |
| Power factor (Cos Ø): | **0.78** |
| Poles: | **6** |
| Insulation class: | **F** |
| Temperature rise Class: | **B** |
| Efficiency 50%: | **86.3 %** |
| Efficiency 75%: | **87.6 %** |
| Efficiency 100%: | **87.2 %** |
| Torque: | **74 N.m** |
| Tstarting/Tnominal: | **2.1** |
| Istarting/Inominal: | **6.7** |
| Tmaximum/Tnominal: | **2.1** |
| Noise: | **62 Db(A)** |
| Weight: | **118 Kg** |
| Bearing DE: | **6309 C3** |
| Bearing NDE: | **6309 C3** |

**Regime - S1** **Altitude - 1000m** **Environment Temperature - 40ºC**

* References applied only in the UK


**CONTACTS:**

UNIVERSAL MOTORS
Rua de São Brás,745
4480-782 VILA DO CONDE

Tel: +351 252 299 080
Fax: +351 252 299 089
Mail: geral@universalmotors.pt


Universal Motors